FLOJET
a xylem brand

HPR6/8
Magnetically Coupled Regenerative Pump

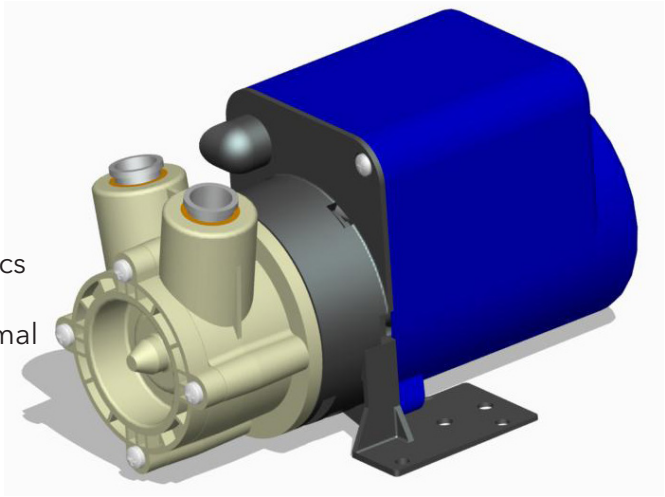

PRINCIPAL APPLICATIONS
Designed for continuous recirculation of carbonated water, aggressive chemicals, chilled water, pure or precious liquids in high pressure systems.

FEATURES
- Manufactured from chemically resistant thermoplastics
- Operating at an optimum flow rate of 3 litres/minute
- Magnetic coupling provides an energy efficient thermal shield, minimising heat transfer to the pumped fluid.
- Temperature stability and product purity ensured
- Leak free continuous operation
- Drip-proof IP22 motor housing
- Low condensation
- Nitrile o rings standard. Other materials available
- Zero maintenance
- PPS pump head
- Long life

OPTIONS

HPR6/8	Port Details
230V 1Ph 50/60 Hz	1/2" OD plain
110V 1Ph 50/60Hz	15mm OD plain
	3/8" ID push fit

DIMENSIONS
Drawings not to scale
Dimensions in millimetres

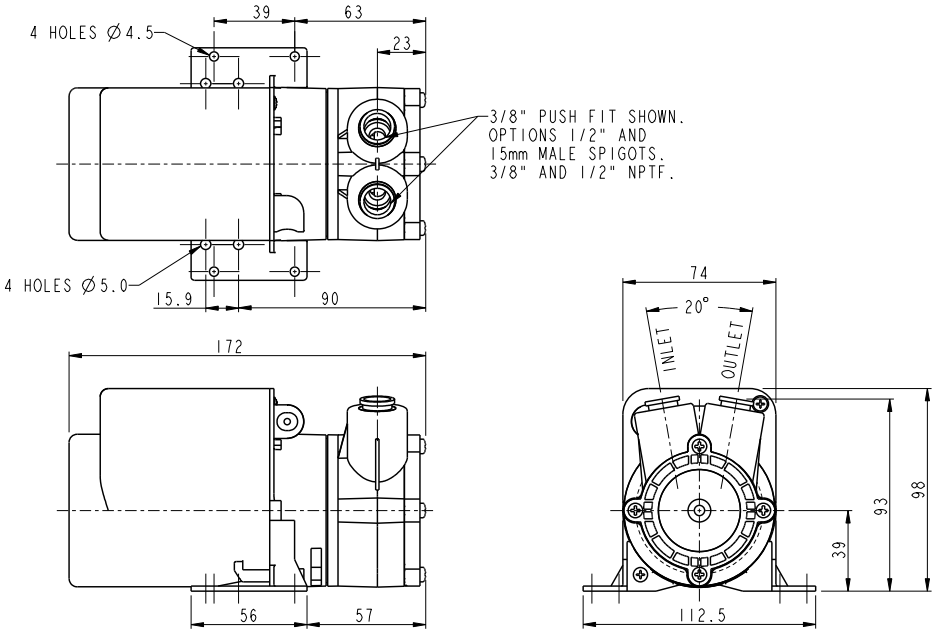

SPECIFICATION

Model	Overall height (mm)	Overall length (mm)	Overall width (mm)	Weight (kg)	Max body pressure (bar)	Run-out flow rate (l/min)	Closed valve head (m)	Temp range (degC)	*Max specific gravity	Motor output (watts)
HPR6/8	98	172	113	2.5	10	5.5	7.4	-20 to +85	1.2	18

*Assuming maximum viscosity of 30cp. Refer to Totton Pumps for higher viscosities and specific gravities

PERFORMANCE

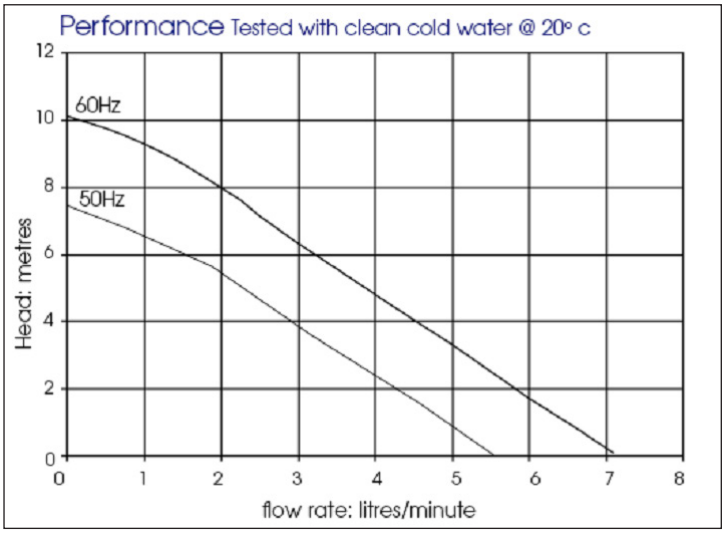

NOTE: These magnetically coupled pumps are designed for use with clean fluids.

Solids will cause jamming. Abrasives will reduce pump life and invalidate the warranty.

HPR pumps are not self priming and are not designed to run dry.

The company reserves the right to change specifications.

PART LIST

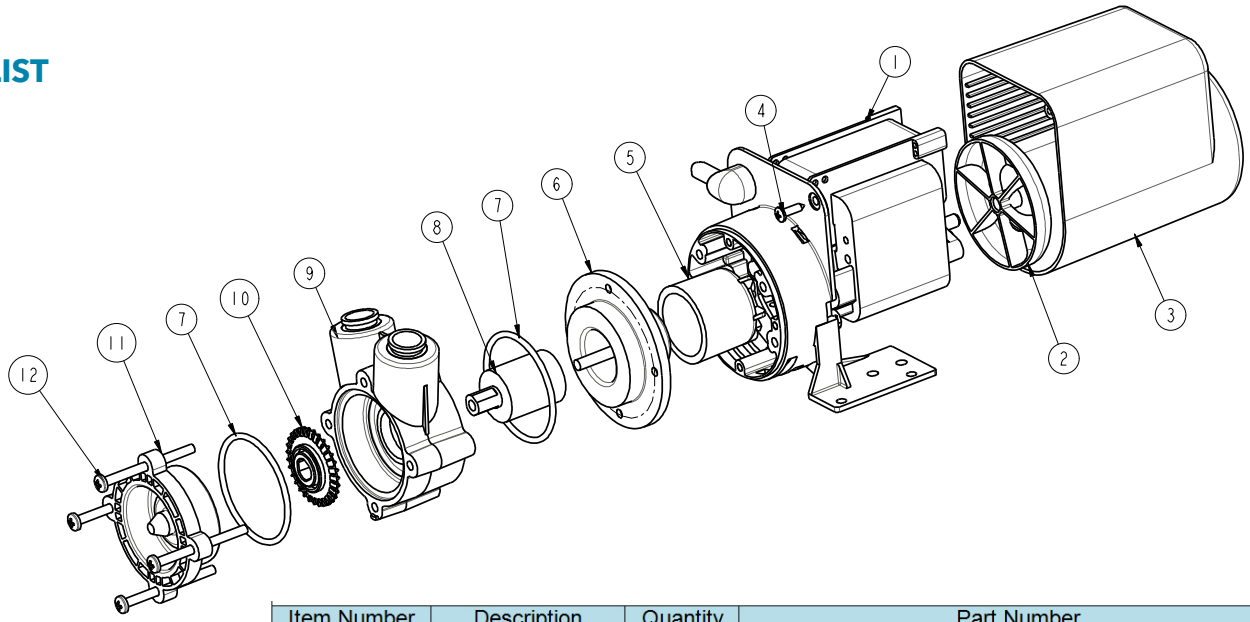

Item Number	Description	Quantity	Part Number		
1	Motor	1	-		
2	Fan	1	033322		
3	Motor Cover	1	043335		
4	Screw	2	001739		
5	Drive Magnet	1	023267		
6	Spindle Housing	1	043321		
7	O Ring	2	013394 Nitrile	013291 EPDM	003265 Viton
8	Driven Magnet	1	033248		
9	Pump Body	1	043324 ½"OD Ports	043323 15mm OD Ports	043327 3/8" ID Ports
10	Impeller	1	033323		
11	Front Cover	1	043322		
12	Screw	4	022112		

xylem
Let's Solve Water

www.xyleminc.com

UK
Xylem
Bingley Road, Hoddesdon
Hertfordshire EN11 0BU
Tel: +44 (0) 1992 450145
Fax: +44 (0) 1992 467132

USA
Xylem
100 Cummings Center Drive
Suite 535-N, Beverly, MA 01915
Tel: +1 978 281-0440
Fax: +1 978 283-2619

ITALY
Xylem
Via Tommaseo, 6
20059 Vimercate, Milano
Tel: +39 039 685 2323
Fax: +39 039 666 307

GERMANY
Xylem
Oststrasse 28
22844 Norderstedt
Tel: +49-40-53 53 73-0
Fax: +49-40-53 53 73-11

JAPAN
Xylem
3-21-10, Shin-Yokohama
Kohoku-Ku, Yokohama, 222-0033
Tel: +81-045-475-8906
Fax: +81-045-477-1162

Warranty: All products of the company are sold, and all services of the company are offered subject to the company's warranty and terms of sale, copies of which will be furnished upon request. Details correct at time of printing. We reserve the right to change specifications without prior notice.

©Copyright 2014 Xylem Inc. Flojet is a trademark of Xylem Inc. or one of its subsidiaries.

43010-0611 Rev: A

Mag Drive Centrifugal

Magnetically Driven Pumps handle products where leak free transfer is a must, where high reliability is paramount and purity of the pumped medium must be maintained. The operation is identical to any centrifugal pump except that the need for the shaft seal is eliminated. This is accomplished by driving the impeller with a magnetic coupling rather than directly with the motor shaft. An excellent pump for chemical transfer applications.

Low Maintenance: Few moving parts mean that wear due to operation is minimal.

No Shaft Seal: Removes the leak path to and leak path from the medium being pumped.

Easy Installation: Compact size for flow rate.

HOW DO THEY WORK?

1. The rotating impeller gives velocity energy to the liquid moving it to the periphery of the volute casing and towards the discharge port.
2. The volute casing discharge arrangement converts velocity energy into static pressure.
3. Centrifugal pumps must be either initially primed or mounted in such a way that liquid is permanently available at the inlet port (eg. submersible pumps).